PRESSURE SWITCHES

PS86/PS87

INTERNAL STRUCTURE
PS86 (G 3/8)

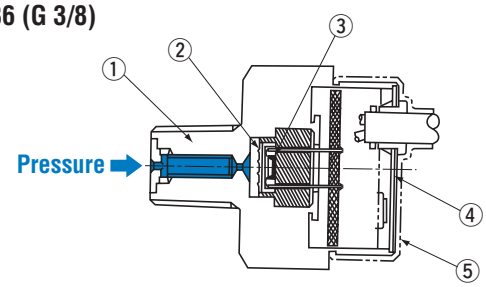

	Part name	Material
1	Fitting	Iron, Ni-plated
2	Stainless steel diaphragm	SUS 316L
3	Sensor chip	Silicone
4	Back cover	SUS 303
5	Drip-proof cover	Silicone rubber

INTERNAL STRUCTURE
PS87 (R 1/4)

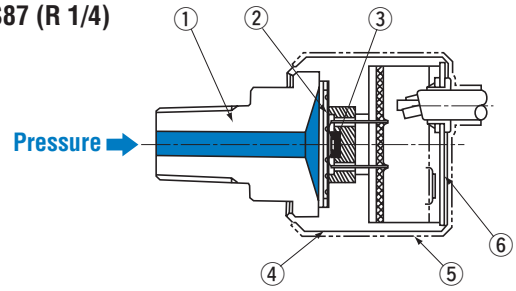

	Part name	Material
1	Fitting	SUS 316
2	Stainless steel diaphragm	Hastelloy® C-22
3	Sensor chip	Silicone
4	Housing	SUS 316
5	Drip-proof cover	Silicone rubber
6	Back cover	SUS 303

FEATURES

- Solidstate pressure switch with no mechanical moving parts
- Isolated output via a photo-coupler
- Switching pressure adjustable and hysteresis band adjustable
- Resistant against surge pressure (PS86)
- SUS 316L welded stainless steel diaphragm (PS86)
- High corrosion resistance by Hastelloy®※ diaphragm (PS87)

MODEL NUMBER DESIGNATION

PS86 - 503 P - B - R2

Series name

Rated pressure range

PS86 : 503 : 0 ~ 5 MPa　104 : 0 ~ 10 MPa
204 : 0 ~ 20 MPa　354 : 0 ~ 35 MPa

PS87 : 353 : 0 ~ 3.5 MPa　503 : 0 ~ 5 MPa

Pressure unit
P : Pa pressure unit

Drip-proof cover
B : Non-provided
H : Provided

Fitting
R2 : R 1/4
G3 : G 3/8 (PS86 only)

※Please refer to the LIST OF MODEL NUMBERS when placing orders.

※Hastelloy® is a resistered trade name of Haynes International Inc.

■ Specifications are subject to change without notice. Specifications in this catalog are for reference. The formal specification sheets will be submitted upon request.

Nov., 2009

PS86/PS87
PRESSURE SWITCHES

■LIST OF MODEL NUMBERS

Pressure medium	Fitting	Pressure reference (Drip-proof cover / Rated pressure range MPa)	Gauge 0 ~ 3.5	Gauge 0 ~ 5	Gauge 0 ~ 10	Gauge 0 ~ 20	Gauge 0 ~ 35
Hydraulic oil	R2 (R 1/4)	Non-provided		PS86-503P-B-R2	PS86-104P-B-R2	PS86-204P-B-R2	PS86-354P-B-R2
		Provided		PS86-503P-H-R2	PS86-104P-H-R2	PS86-204P-H-R2	PS86-354P-H-R2
	G3 (G 3/8)	Non-provided		PS86-503P-B-G3	PS86-104P-B-G3	PS86-204P-B-G3	PS86-354P-B-G3
		Provided		PS86-503P-H-G3	PS86-104P-H-G3	PS86-204P-H-G3	PS86-354P-H-G3
Gases/ Liquids	R2 (R 1/4)	Non-provided	PS87-353P-B-R2	PS87-503P-B-R2			
		Provided	PS87-353P-H-R2	PS87-503P-H-R2			

⧄: Not available
※Verify the above model numbers when placing orders.

■STANDARD SPECIFICATIONS

● Unless otherwise specified, the specs are defined at an ambient temperature of 25±5 °C and excitation voltage of 12 V DC.C.

Item / Model number		PS86 503P	PS86 104P	PS86 204P	PS86 354P	PS87 353P	PS87 503P
General specifications	Pressure reference	Gauge ※1					
	Rated pressure range MPa	5	10	20	35	3.5	5
	Maximum pressure MPa	10	20	40	52.5	7	10
	Operating temp. range °C	– 10 ~ 75					
	Compensated temp. range °C	0 ~ 50					
	Operating humidity %RH	35 ~ 85 (No condensation)					
	Storage temp. °C	– 20 ~ 90 (Atmospheric pressure, humidity 65 %RH maximum)					
	Pressure medium ※2	Hydraulic oil				Corrosive gases/liquids compatible with Hastelloy C-22 and SUS 316	
	Insulation resistance MΩ minimum	100 (500 V DC)					
	Dielectric strength	350 V AC, 60 s (Leakage current 0.5 mA maximum)					
	Pressure port	R 1/4、G 3/8				R 1/4	
	Net weight g	Approx. 170				Approx. 190	
	Protection grade	Without drip-proof cover : IP-54, With drip-proof cover : IP-65					

※1 The transducer measures gauge pressure using an absolute pressure sensing element.
※2 Hydraulic oil is used as a measurement medium at the time of delivery inspection.

PS86/PS87
PRESSURE SWITCHES

Item		Model number	PS86				PS87	
			503P	104P	204P	354P	353P	503P
Power	Supply voltage		12 ~ 24 V ± 10 %					
	Consumption current	maximum	15 mA					
Switch output	No. of outputs		1					
	Output interface		Open collector output which insulated a photo-coupler					
	Setting method		Adjustable by VR					
	Adjustable range		5 ~ 105 % of rated pressure range					
	Display		Red LED ON					
	Accuracy 0~50 °C (Reference temp.: 25 °C)	%F.S.	± 3					
	Hysteresis	%F.S.	Approx. 1 ~ 10 % of setting range					
	Switching capacity		35 V DC 100 mA					
	Residual voltage	V maximum	1.2					
	Response	ms	Approx. 20				Approx. 2	

■ENVIRONMENTAL CHARACTERISTICS

Test item	Test conditions (At 25 ± 5 °C)	Permissible change
Vibration	10 ~ 500 Hz, 1.5 mm maximum/98.1 m/s², 3 directions for 2 hours each	Switch output setting: ± 3 %F.S. maximum
Shock	490 m/s², 3 directions for 3 times each	
Pressure cycling	Rated pressure range,10⁶ cycles	
Moisture resistance	40 °C, 90 ~ 95 %RH, 240 hrs.	

■INTERNAL ELECTRICAL SCHEMATICS

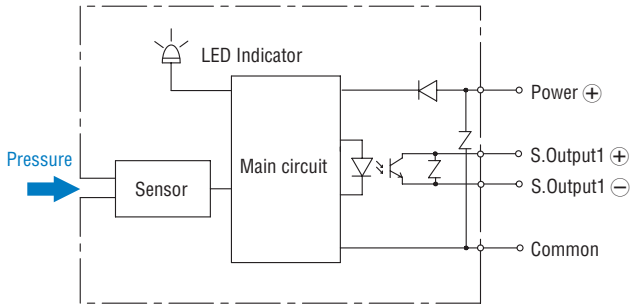

■SWITCH OUTPUT SCHEMATICS

● PS86/87-＊＊＊P

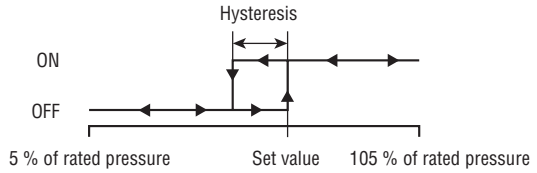

※Adjustable hysteresis

PS86/PS87
RESSURE SWITCHES

■OUTLINE DIMENSIONS

Unless otherwise specified, tolerance : ± 0.5 (Unit: mm)

● Configurations of joint G3 (G 3/8) type

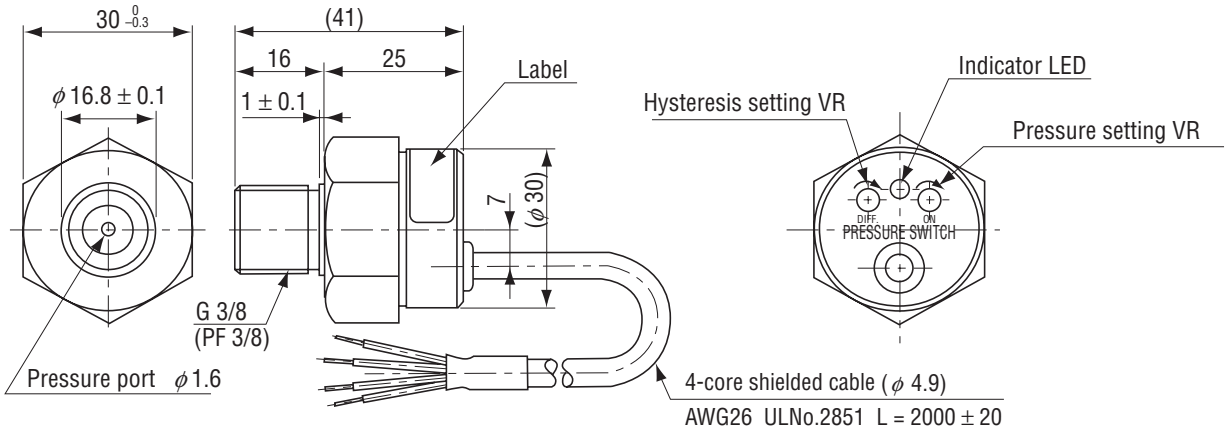

● Configurations of joint R2 (R 1/4) type

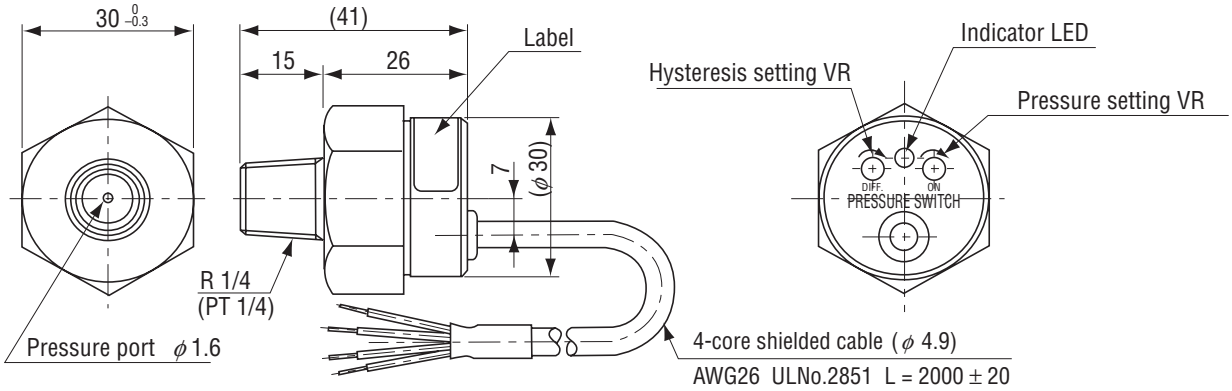

Wire color	Connection
Red	Power ⊕
Black	Power ⊖
White	Output ⊕
Green	Output ⊖

● Drip-proof cover type

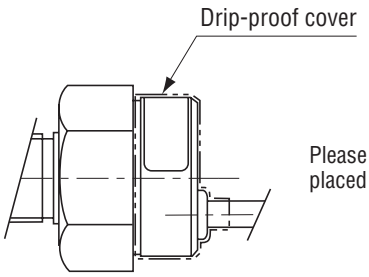

Please make sure that the drip-proof cover is properly placed over the main body and the cable.

PS86/PS87
PRESSURE SWITCHES

■OUTLINE DIMENSIONS

Unless otherwise specified, tolerance : ± 0.5 (Unit: mm)

● PS87

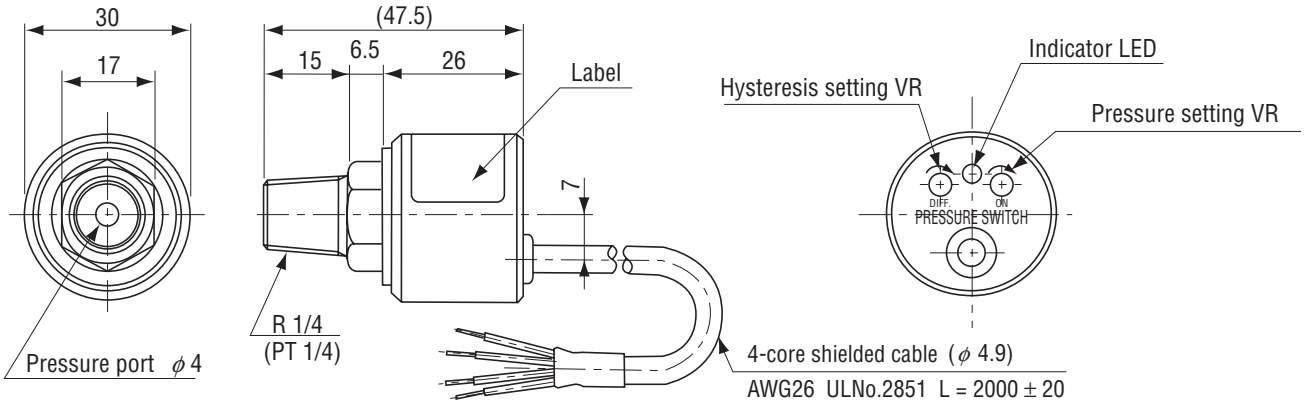

Wire color	Connection
Red	Power ⊕
Black	Power ⊖
White	Output ⊕
Green	Output ⊖

● Drip-proof cover type

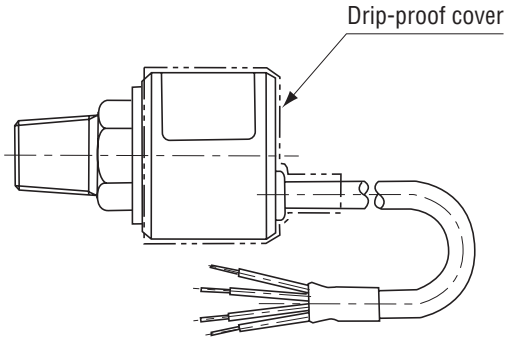

Please make sure that the drip-proof cover is properly placed over the main body and the cable.